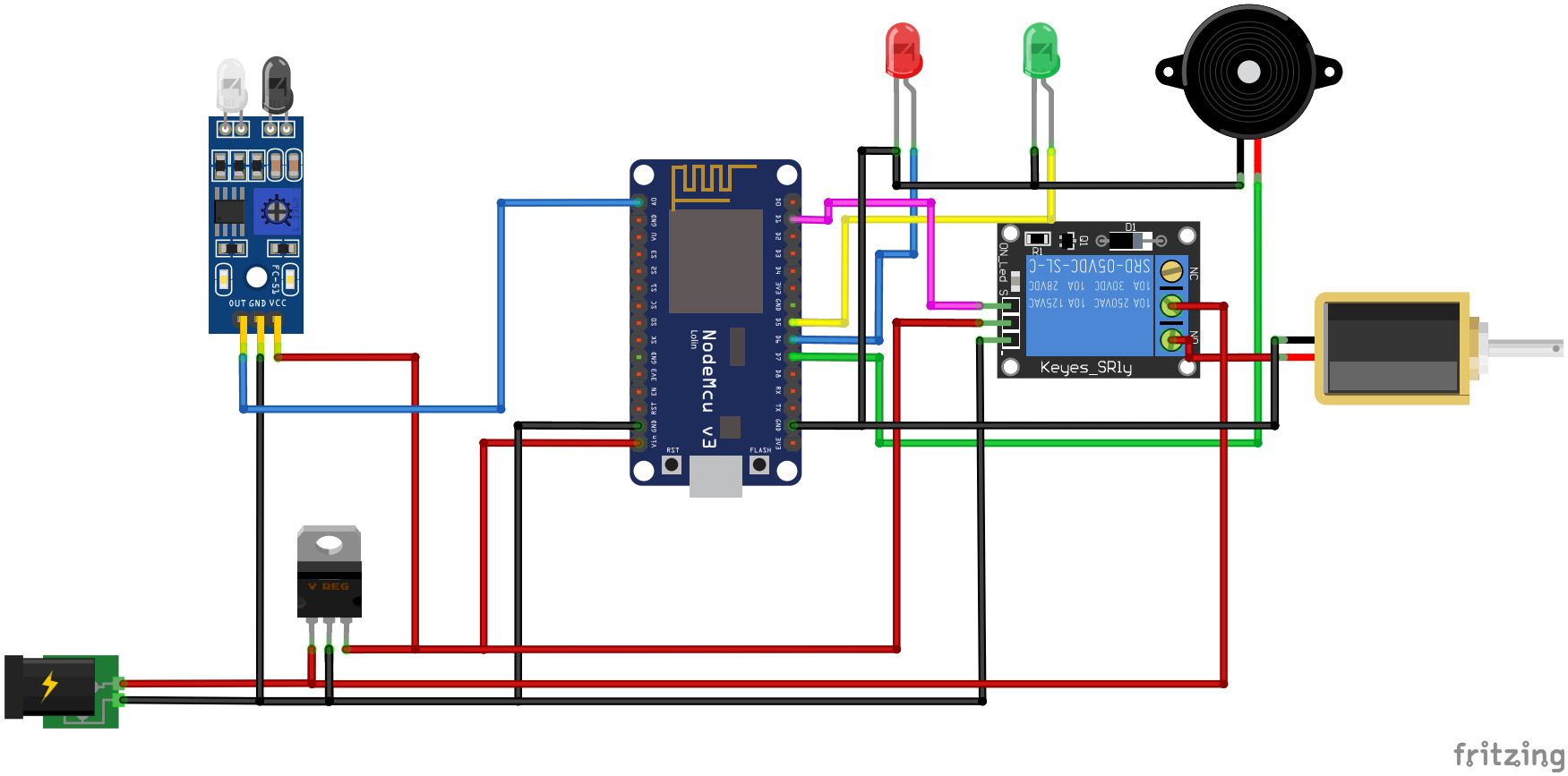
OUT GND VCC
FC-51
NodeMcu v3
Lolin
RST
FLASH
Keyes_SR1y
SRD-05VDC-SL-C
10A 250VAC 10A 125VAC
10A 30VDC 10A 28VDC
NC
NO
COM
D1
R1
Q1
V REG
fritzing